Wall Mount Bracket

LTB342-140B

Suitable for dome camera wall mounting

Properties	
Paramete r	Wall Mounting Bracket for CMHD34XX
Construction	Aluminum Alloy
Dimension	Φ140×182×120mm(Φ5.5″ ×7.2″ ×4.7″)
Weight	1488g(3.2lbs)

Dimensions:

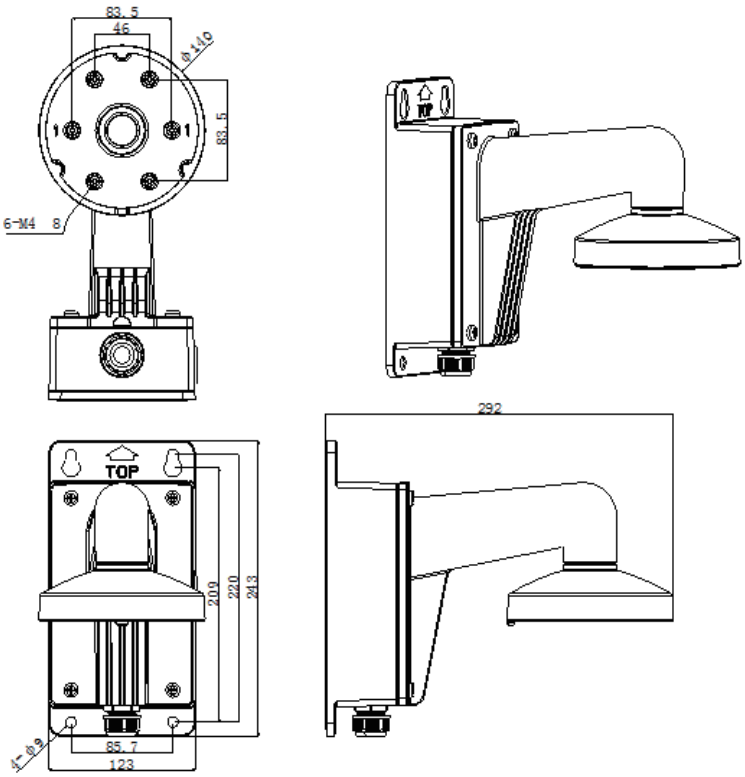

©2016 LT Security, Inc. All Rights Reserved. White papers, data sheets, quick start guides, and/or user manuals are for reference only and may or may not be entirely up to date or accurate based upon the version or models. Product names mentioned herein may be the unregistered and/or registered trademarks of their respective owners.